SHRS-60 (Shown)
SHLS-60

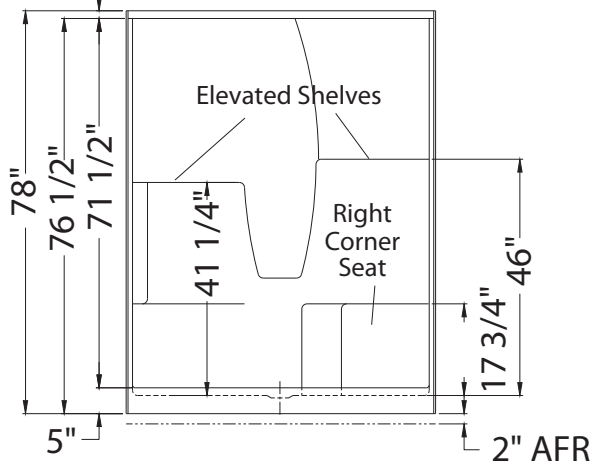

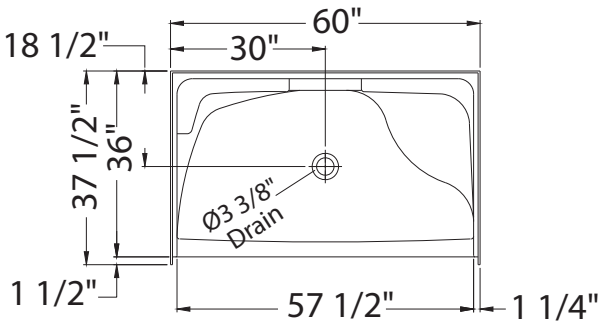

All dimensions are approximate. Structure measurements must be verified against the unit to ensure proper fit.